SPECIFICATIONS
TURNTABLE DIAMETER: 177 $\frac{3}{16}$"[4500mm]
TURNTABLE HEIGHT: 20"
TURNTABLE SPEED: 0.2-1.0 RPM
CAPACITY: 10,000 LB
MOTOR AND DRIVE: NORD 1.0 HP 230V/3Φ/60Hz @2.9 FLA

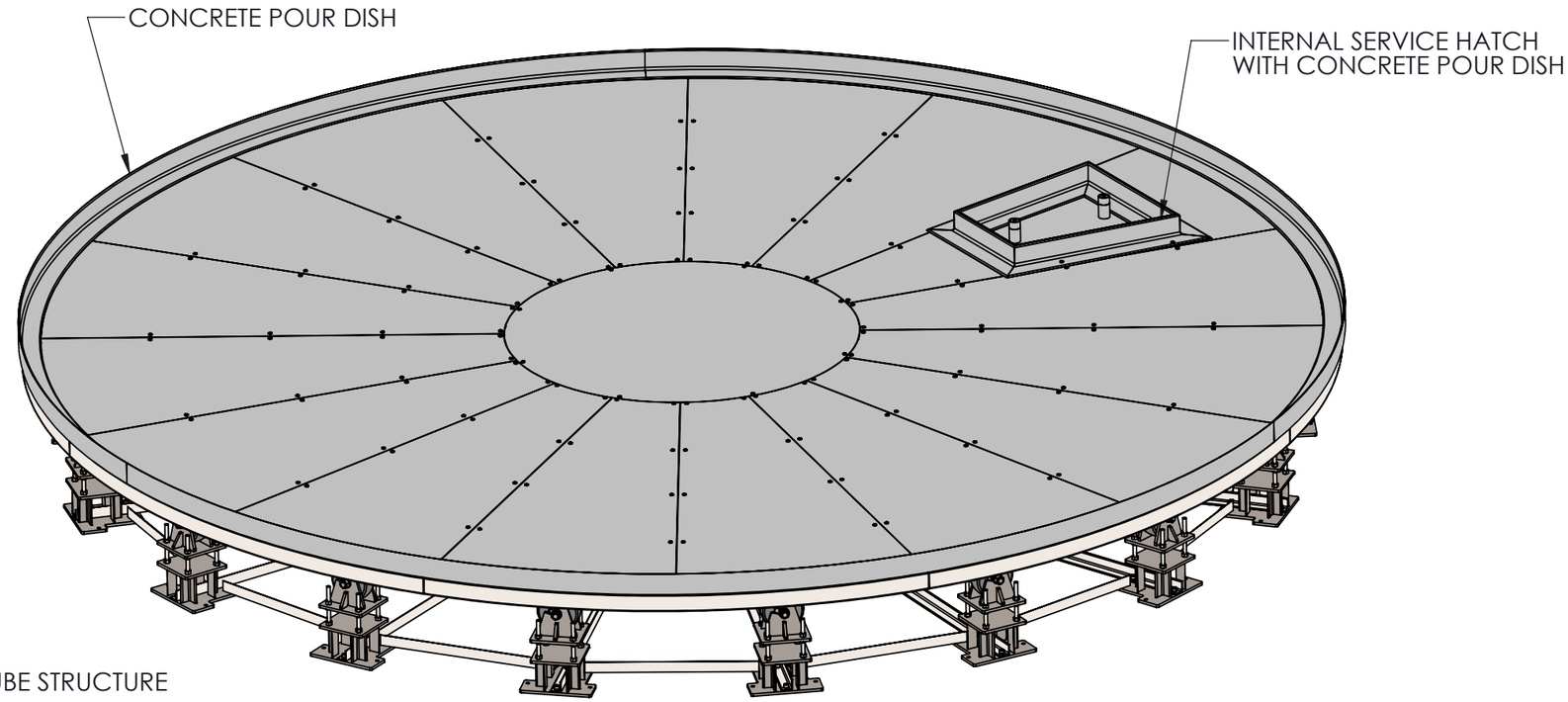

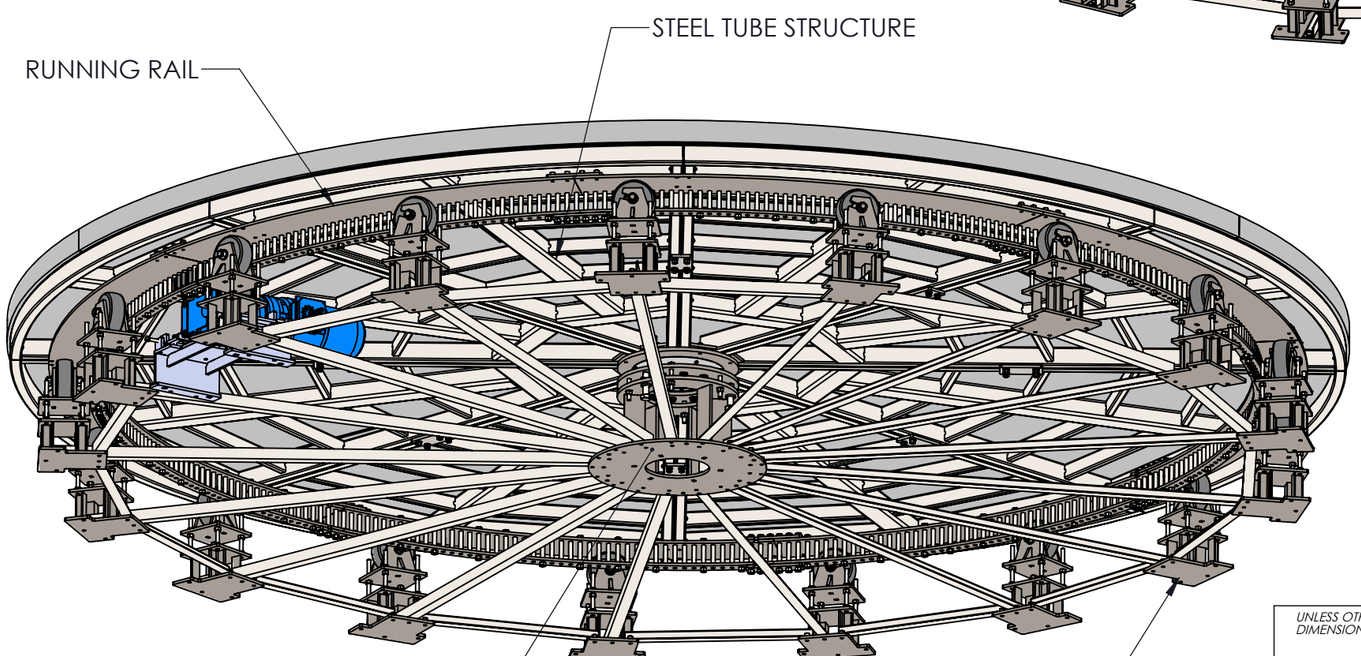

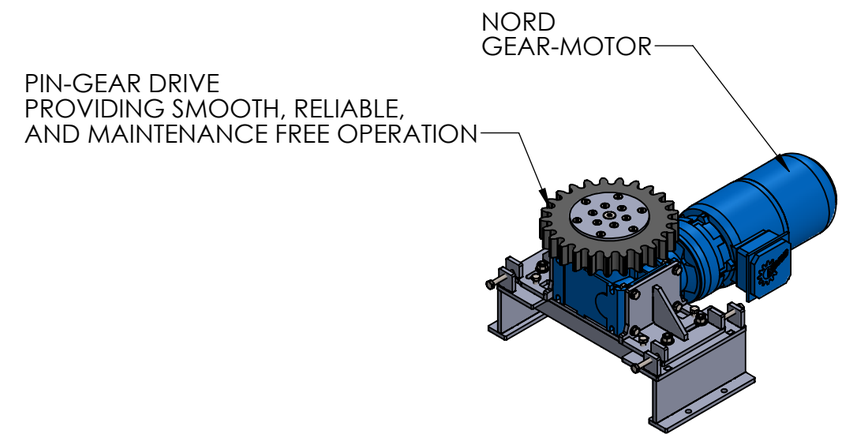

0 1:20

DESIGN BY:	M.CASTRO	3/28/2018
DRAWN BY:	M.CASTRO	8/4/2022

CarouselUSA

UNLESS OTHERWISE NOTED DIMENSIONS ARE IN INCHES

TOLERANCES

.X = ± .125
.XX = ± .0625
.XXX = ± .010

FRACTIONAL = ±1/16"

ANGLES = ± .5

TITLE:

MODEL 45CCI TURNTABLE GENERAL ARRANGEMENT-OVERVIEW

CAROUSEL USA

15206 Ceres Avenue
Fontana, CA 92335
TEL: (626) 334-7190
FAX: (626) 236-4060
www.Carousel-USA.com

PROPRIETARY AND CONFIDENTIAL

The information contained in this drawing is the sole property of Carousel USA. Any reproduction in part or as a whole without the written permission of Carousel USA is prohibited.

SIZE	DWG. NO.	REV
B	GA-45CCI	–
SCALE: 1:20	DO NOT SCALE DRAWING	SHEET 1 OF 4

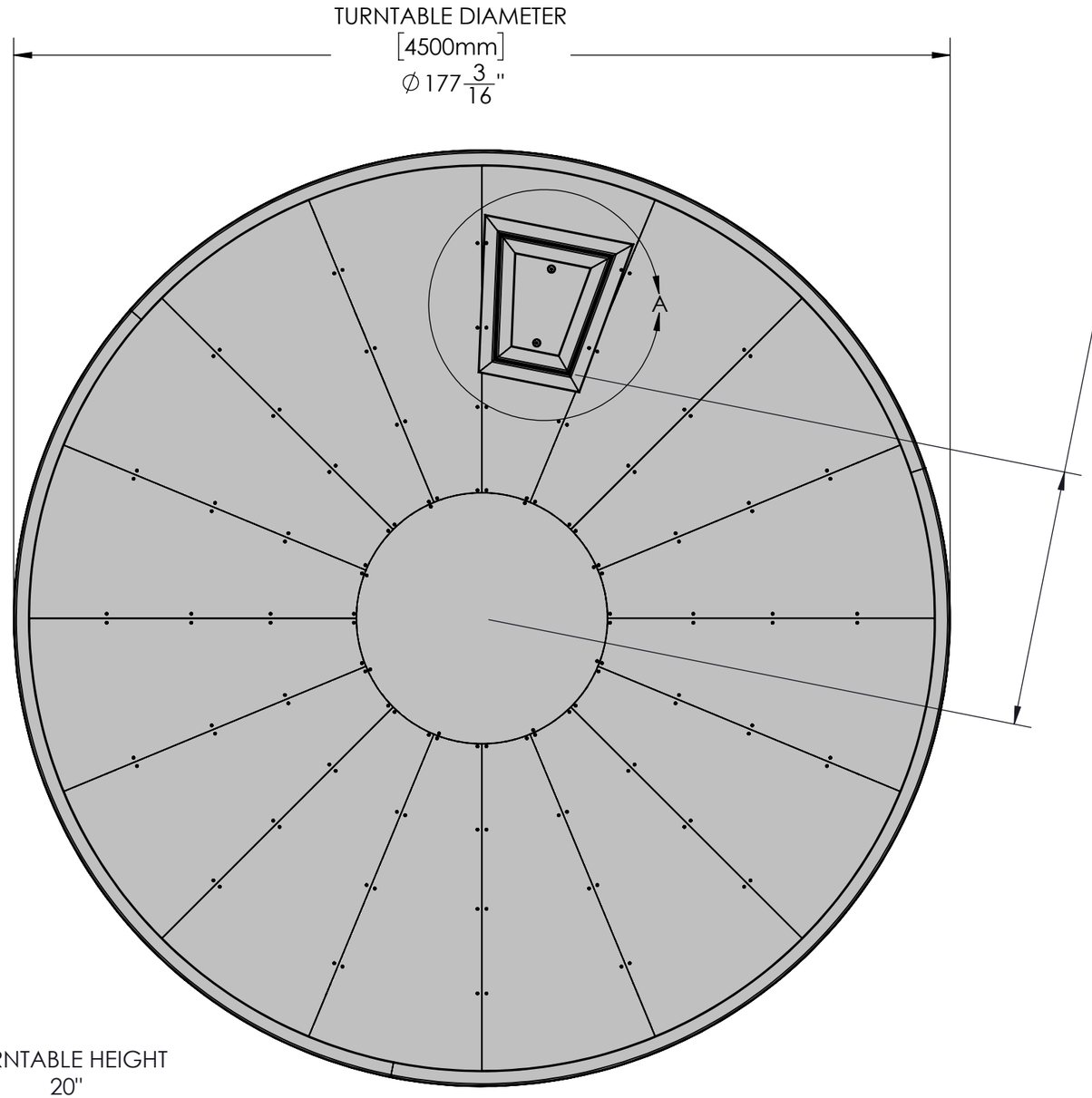

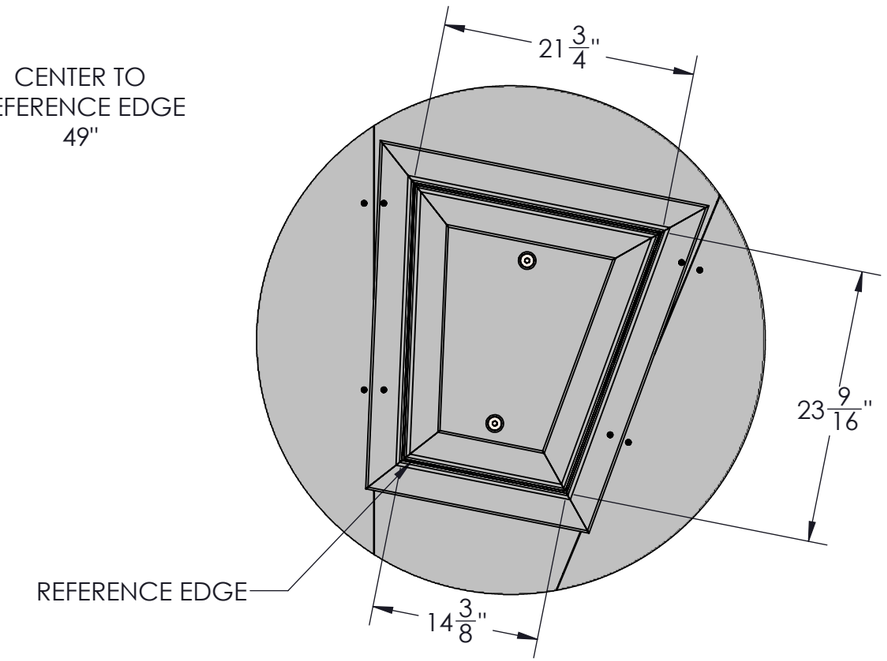

DETAIL A
SCALE 1 : 13

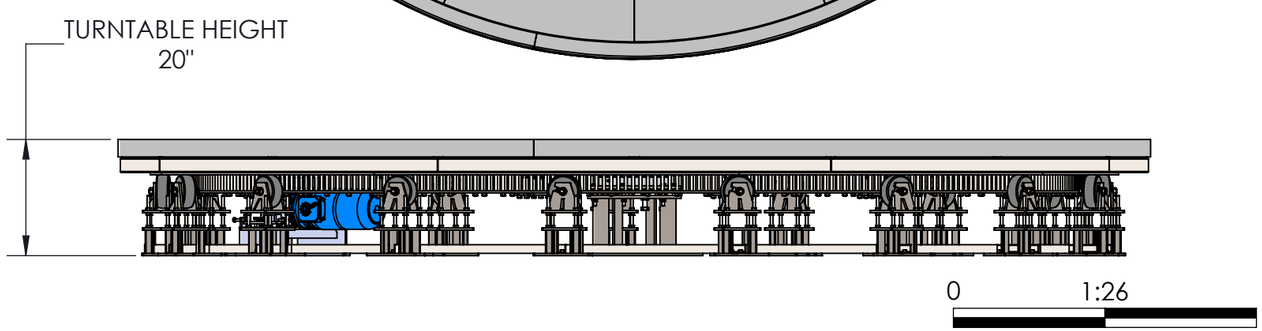

DESIGN BY:	M.CASTRO	3/28/2018	CarouselUSA
DRAWN BY:	M.CASTRO	8/4/2022	

UNLESS OTHERWISE NOTED DIMENSIONS ARE IN INCHES

TOLERANCES

.X = ± .125
.XX = ± .0625
.XXX = ± .010

FRACTIONAL = ±1/16"

ANGLES = ± .5

TITLE:

MODEL 45CCI TURNTABLE GENERAL ARRANGEMENT-DIMENSIONS

CAROUSEL USA

15206 Ceres Avenue
Fontana, CA 92335
TEL: (626) 334-7190
FAX: (626) 236-4060
www.Carousel-USA.com

PROPRIETARY AND CONFIDENTIAL

The information contained in this drawing is the sole property of Carousel USA. Any reproduction in part or as a whole without the written permission of Carousel USA is prohibited.

SIZE	DWG. NO.	REV
B	GA-45CCI	–
SCALE: 1:26	DO NOT SCALE DRAWING	SHEET 2 OF 4

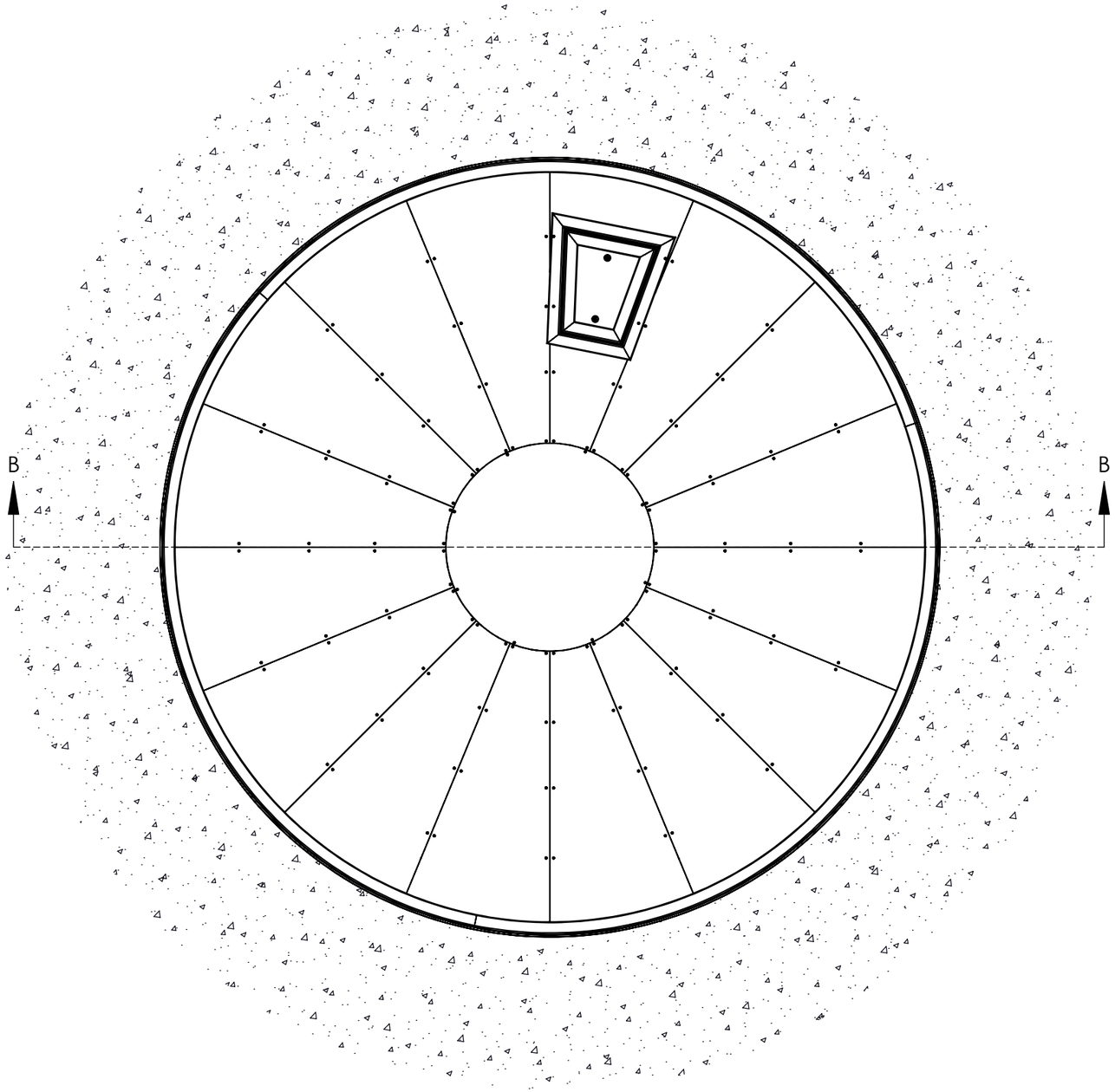

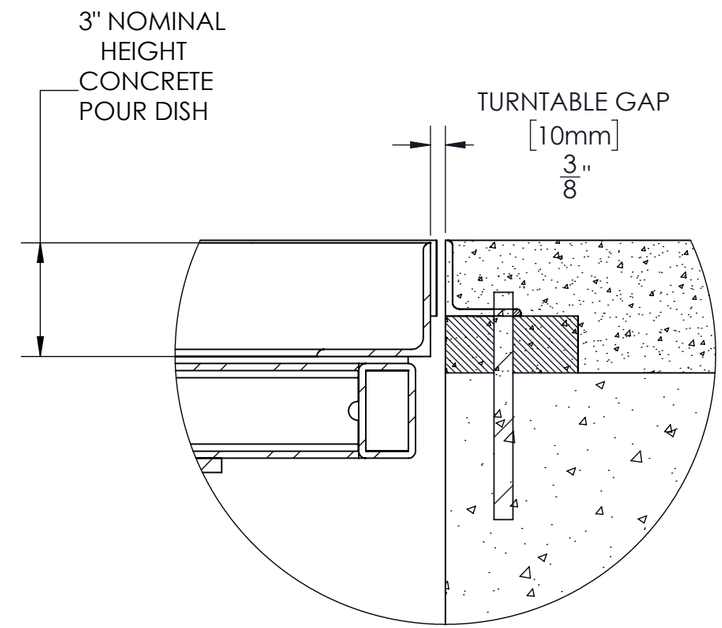

DETAIL C
SCALE 1 : 4

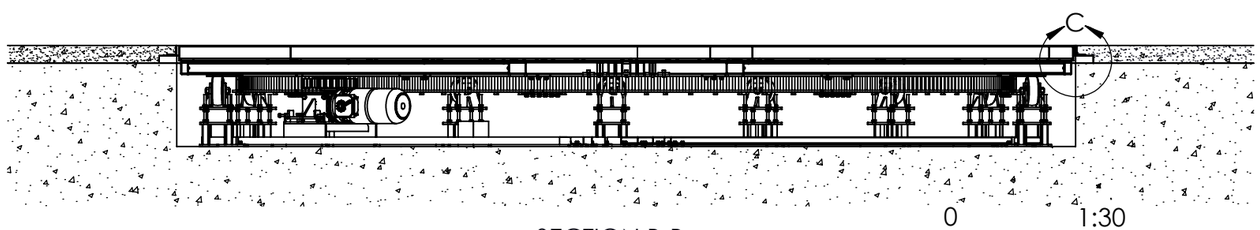

SECTION B-B

0 1:30

DESIGN BY:	M.CASTRO	3/28/2018	CarouselUSA
DRAWN BY:	M.CASTRO	8/4/2022	

UNLESS OTHERWISE NOTED DIMENSIONS ARE IN INCHES

TOLERANCES

.X = ± .125
.XX = ± .0625
.XXX = ± .010

FRACTIONAL = ±1/16"

ANGLES = ± .5

TITLE:

MODEL 45CCI TURNTABLE GEN. ARRANGEMENT- WITH PIT

CAROUSEL USA

15206 Ceres Avenue
Fontana, CA 92335
TEL: (626) 334-7190
FAX: (626) 236-4060
www.Carousel-USA.com

PROPRIETARY AND CONFIDENTIAL

The information contained in this drawing is the sole property of Carousel USA. Any reproduction in part or as a whole without the written permission of Carousel USA is prohibited.

SIZE	DWG. NO.	REV
B	GA-45CCI	-
SCALE: 1:30	DO NOT SCALE DRAWING	SHEET 3 OF 4

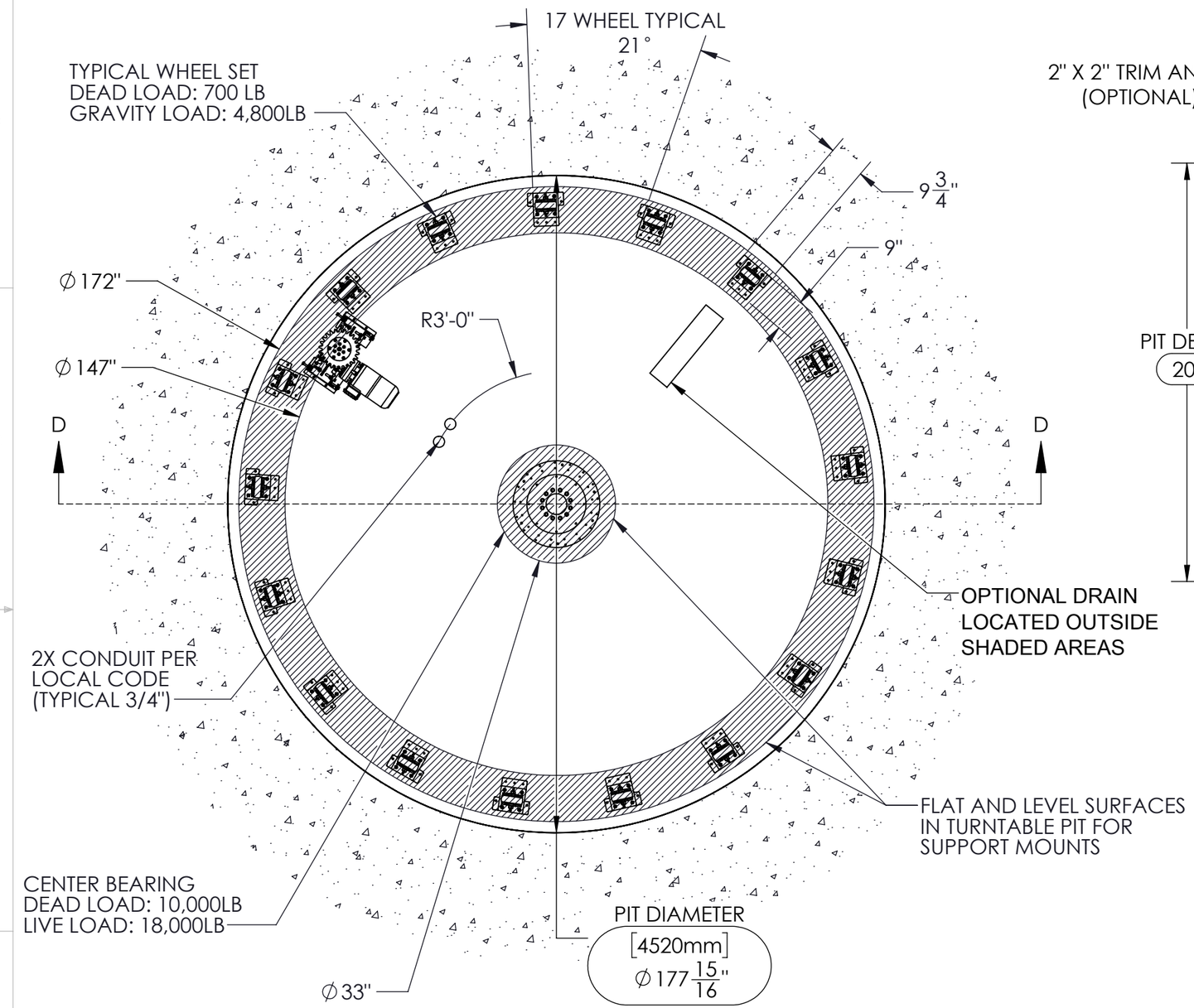

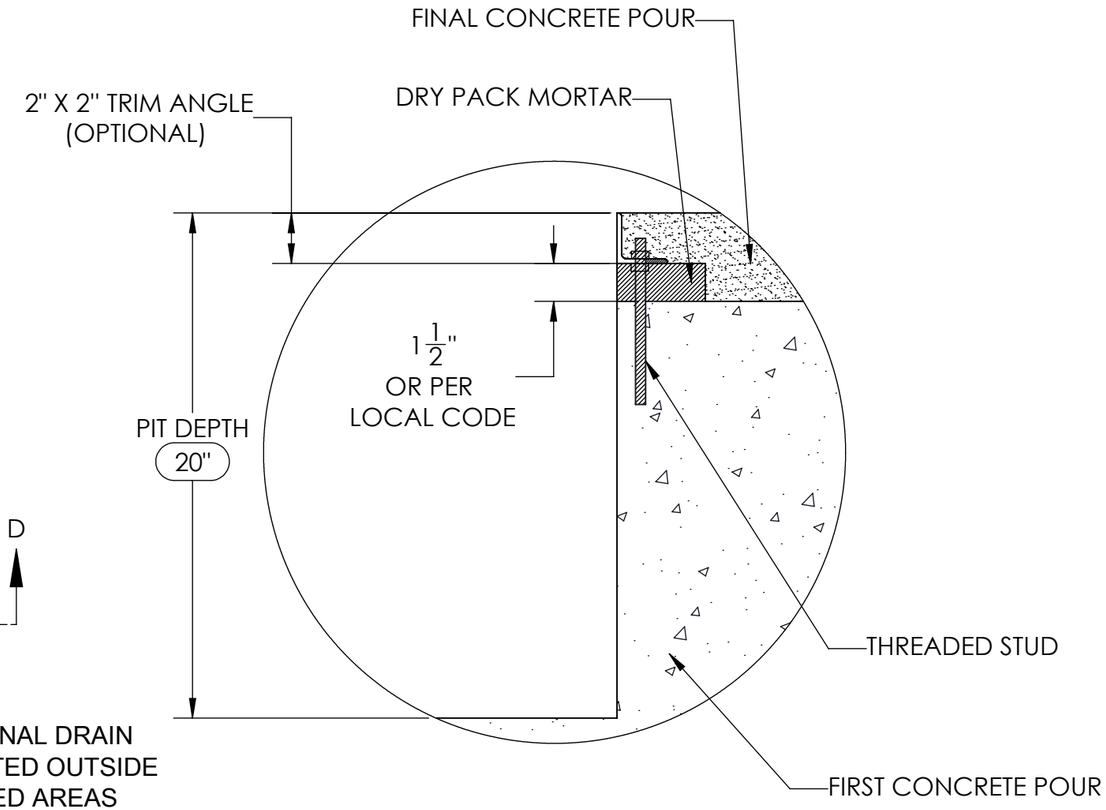

DETAIL E
SCALE 1 : 6

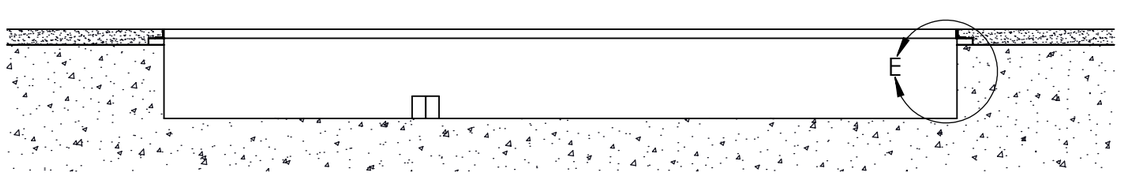

SECTION D-D
SCALE 1 : 40

0 1:34

DESIGN BY:	M.CASTRO	3/28/2018	CarouselUSA
DRAWN BY:	M.CASTRO	8/4/2022	

UNLESS OTHERWISE NOTED DIMENSIONS ARE IN INCHES

TOLERANCES

.X = ± .125
.XX = ± .0625
.XXX = ± .010

FRACTIONAL = ±1/16"

ANGLES = ± .5

TITLE:

MODEL 45CCI TURNTABLE CONCRETE PIT

CAROUSEL USA

15206 Ceres Avenue
Fontana, CA 92335
TEL: (626) 334-7190
FAX: (626) 236-4060
www.Carousel-USA.com

PROPRIETARY AND CONFIDENTIAL

The information contained in this drawing is the sole property of Carousel USA. Any reproduction in part or as a whole without the written permission of Carousel USA is prohibited.

SIZE	DWG. NO.	REV
B	GA-45CCI	-
SCALE: 1:34	DO NOT SCALE DRAWING	SHEET 4 OF 4