SPECIFICATIONS	
TURNTABLE DIAMETER:	$196\frac{7}{8}$", [5000mm]
TURNTABLE HEIGHT:	$3\frac{1}{4}$"
ROTATIONAL SPEED:	CW/CCW 0.2-1.0 RPM
LOAD CAPACITY:	10,000 LBS
MOTOR AND DRIVE:	NORD 1.5 HP 230V/3Φ/60Hz @ 4.5 FLA
ASSEMBLED TURNTABLE WEIGHT:	3,515 LBS
ASSEMBLY P/N	50500

TOP SURFACE AVAILABLE IN SMOOTH OR DIAMOND TREAD
3/16" CARBON STEEL
3/16" STAINLESS STEEL
1/4" ALUMINUM

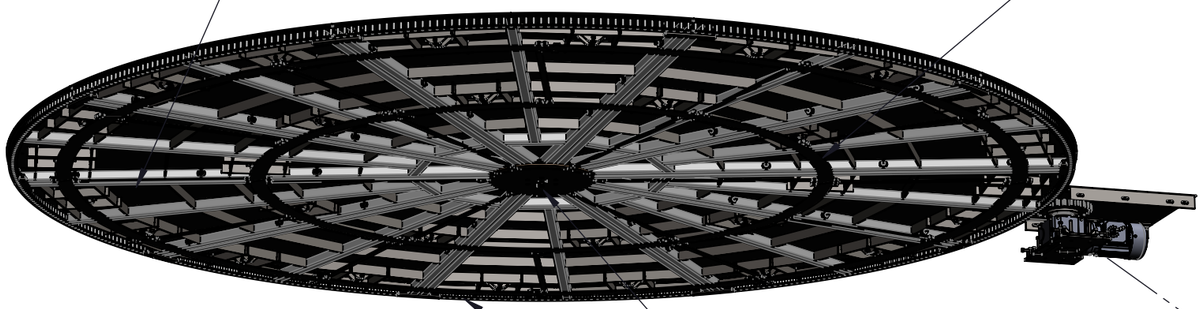

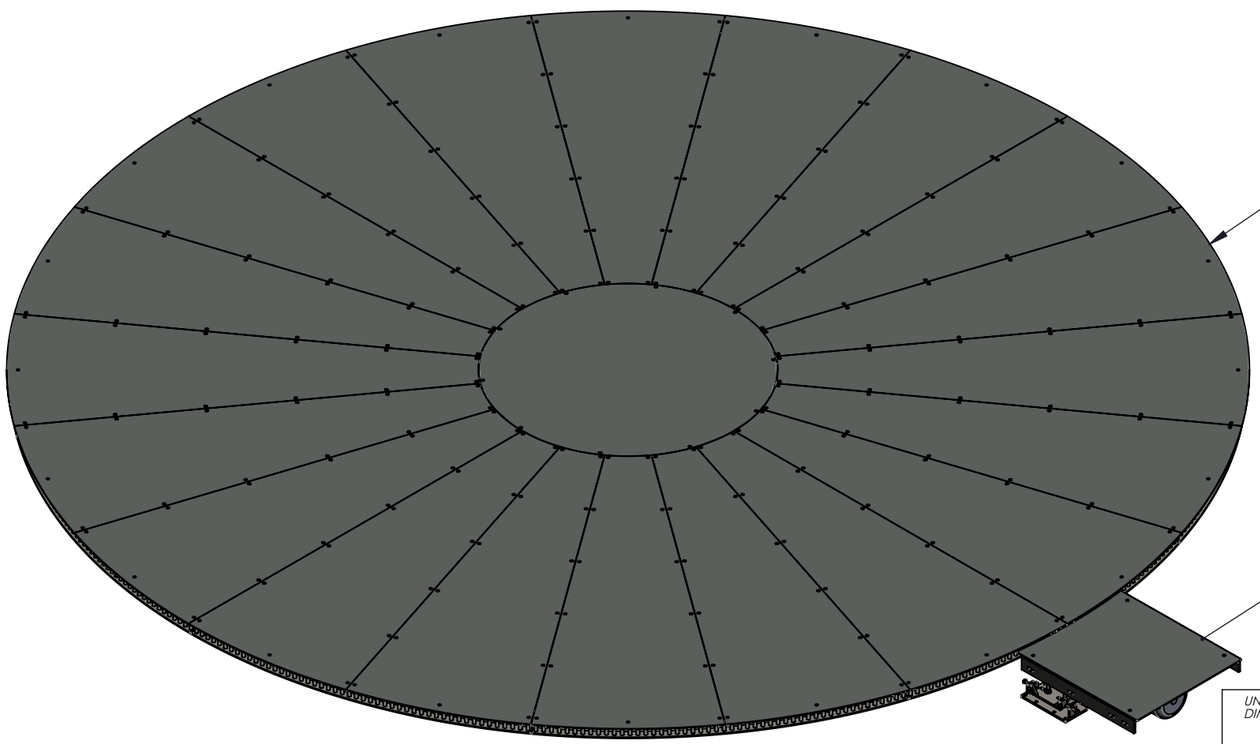

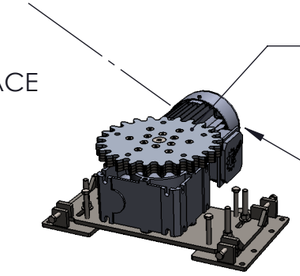

MOTOR MOUNT ASSEMBLY

DESIGN BY:	M.CASTRO	11/10/2016
DRAWN BY:	M.CASTRO	8/11/2026

CarouselUSA

UNLESS OTHERWISE NOTED DIMENSIONS ARE IN INCHES

TOLERANCES

.X = ± .125
.XX = ± .0625
.XXX = ± .010

FRACTIONAL = ±1/16"

ANGLES = ± .5

TITLE:

50SSO TURNTABLE, GENERAL ARRANGEMENT
GENERAL ARRANGEMENT-FEATURES

CAROUSEL USA

15206 Ceres Avenue
Fontana, CA 92335
TEL: (626) 334-7190
FAX: (626) 236-4060
www.Carousel-USA.com

PROPRIETARY AND CONFIDENTIAL

The information contained in this drawing is the sole property of Carousel USA. Any reproduction in part or as a whole without the written permission of Carousel USA is prohibited.

SIZE	DWG. NO.	REV
B	GA-50SSO	B
SCALE: 1:24	DO NOT SCALE DRAWING	SHEET 1 OF 5

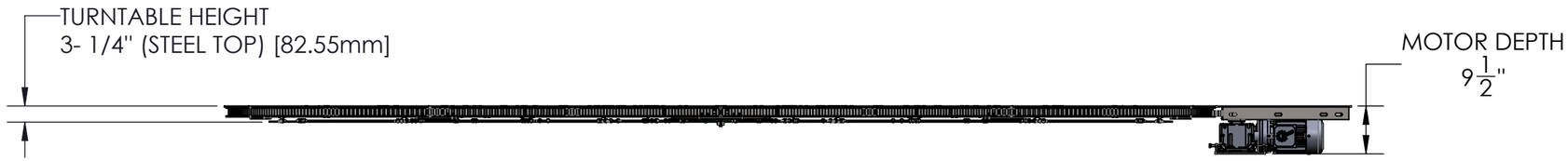

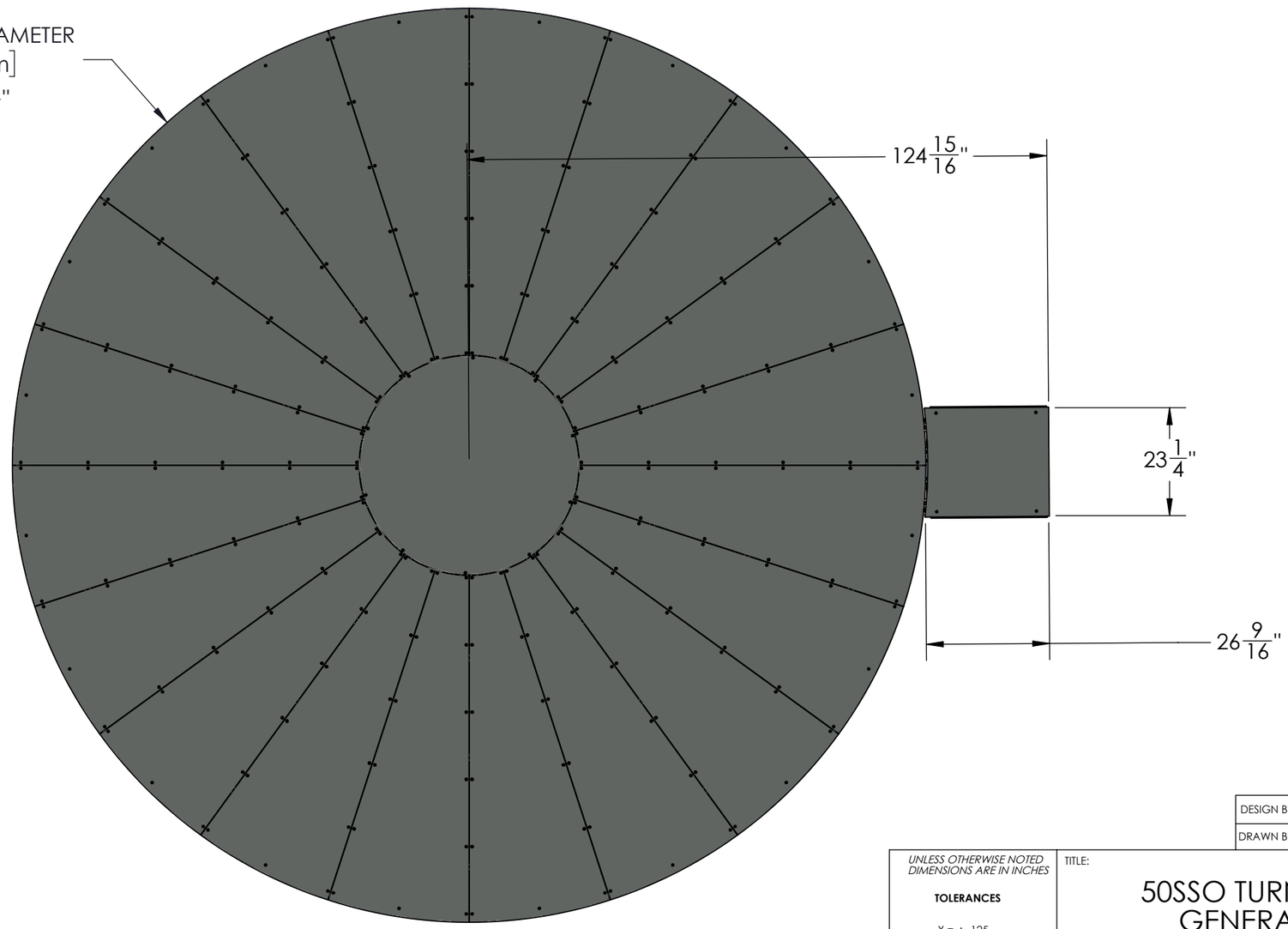

DESIGN BY:	M.CASTRO	11/10/2016
DRAWN BY:	M.CASTRO	8/11/2026

CarouselUSA

UNLESS OTHERWISE NOTED DIMENSIONS ARE IN INCHES

TOLERANCES

.X = ± .125
.XX = ± .0625
.XXX = ± .010

FRACTIONAL = ±1/16"

ANGLES = ± .5

TITLE:

50SSO TURNTABLE, GENERAL ARRANGEMENT GENERAL ARRANGEMENT-DIMENSIONS

CAROUSEL USA

15206 Ceres Avenue
Fontana, CA 92335
TEL: (626) 334-7190
FAX: (626) 236-4060
www.Carousel-USA.com

PROPRIETARY AND CONFIDENTIAL

The information contained in this drawing is the sole property of Carousel USA. Any reproduction in part or as a whole without the written permission of Carousel USA is prohibited.

SIZE	DWG. NO.	REV
B	GA-50SSO	B
SCALE: 1:28	DO NOT SCALE DRAWING	SHEET 2 OF 5

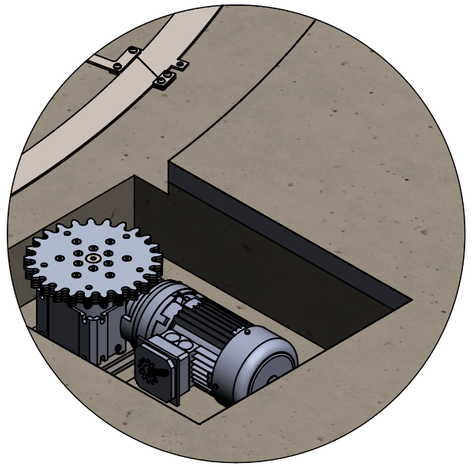

DETAIL AA
SCALE 1 : 12

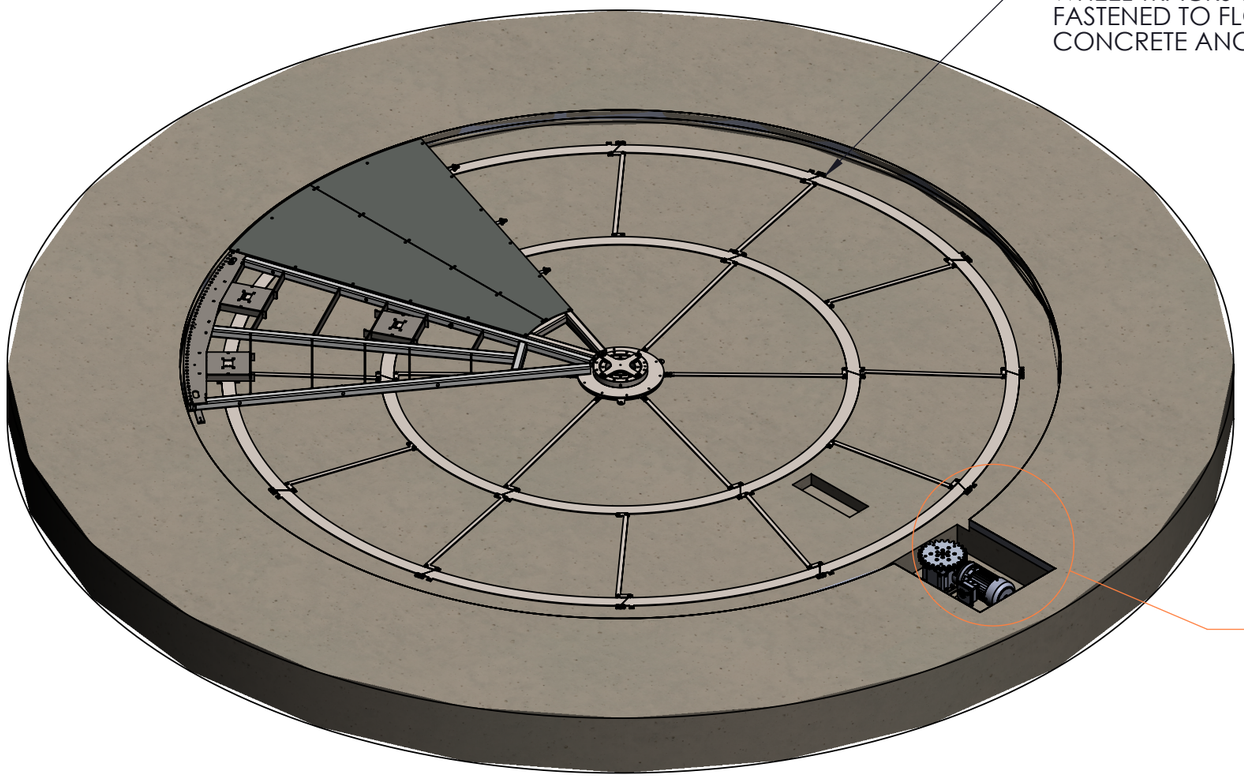

PIT GAP
[10mm]
$\frac{3}{8}$"

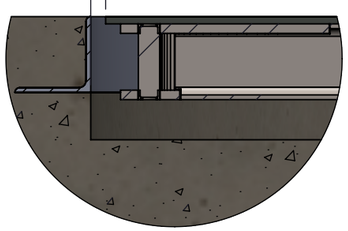

DETAIL AG
SCALE 1 : 4

FLOOR FLATNESS 1/4" HEIGHT DEVIATION IN
ACCORDANCE WITH SURFACE MOUNTED
TURNTABLE SITE FLATNESS INSPECTION
PROCEDURE DOCUMENT

AG

SECTION AB-AB

NOTES:
1. ALL COMPONENTS TO BE FASTENED TO FLOOR WITH 3/8" X 3.75" WEDGE ANCHORS SUCH AS REDHEAD #WS-3850
2. MIN EMBED DEPTH 1.75"
3. TORQUE ANCHORS TO 25 FT. LB.

NOTES:

1. LEVEL, SMOOTH CONCRETE ENGINEERED FOR PSF POINT LOADS EQUIVELENT OR SURPASSING THAT OF TURNTABLE EQUIPMENT
2. SIZE CONDUIT PER LOCAL CODE

DESIGN BY:	M.CASTRO	11/10/2016
DRAWN BY:	M.CASTRO	8/11/2026

CarouselUSA

UNLESS OTHERWISE NOTED DIMENSIONS ARE IN INCHES

TOLERANCES

.X = ± .125
.XX = ± .0625
.XXX = ± .010

FRACTIONAL = ±1/16"

ANGLES = ± .5

TITLE:

50SSO TURNTABLE, GENERAL ARRANGEMENT GENERAL ARRANGEMENT-FLOOR REQ.

CAROUSEL USA

15206 Ceres Avenue
Fontana, CA 92335
TEL: (626) 334-7190
FAX: (626) 236-4060
www.Carousel-USA.com

PROPRIETARY AND CONFIDENTIAL

The information contained in this drawing is the sole property of Carousel USA. Any reproduction in part or as a whole without the written permission of Carousel USA is prohibited.

SIZE	DWG. NO.	REV
B	GA-50SSO	B

SCALE: 1:34 | DO NOT SCALE DRAWING | SHEET 3 OF 5

NOTE: WHEN LAYING OUT CONCRETE PIT REFERENCE INSTRUCTIONS BELOW

1. FIND CENTER POINT OF TURNTABLE/PIT LOCATION, MARK IT AND LAYOUT DIAMETER, D1
2. FROM MARKED CENTER POINT TO DESIRED MOTOR PIT LOCATION MARK D2
3. FROM OUTSIDE OF MOTOR PIT MARK D3 AND D4
4. FOR MOTOR PIT DEPTH, REFERENCE D5
5. FOR TURNTABLE PIT DEPTH, REFERENCE D6

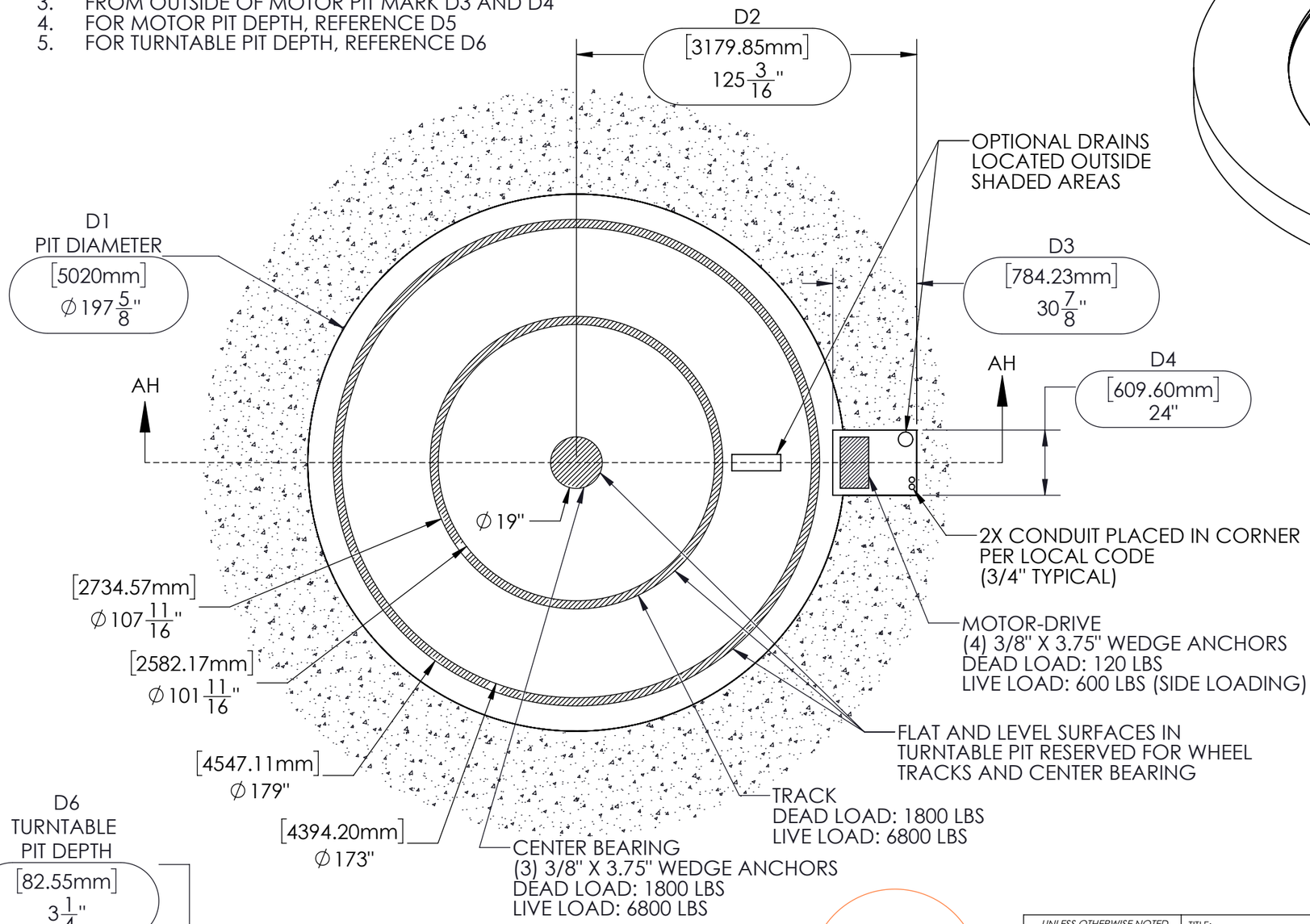

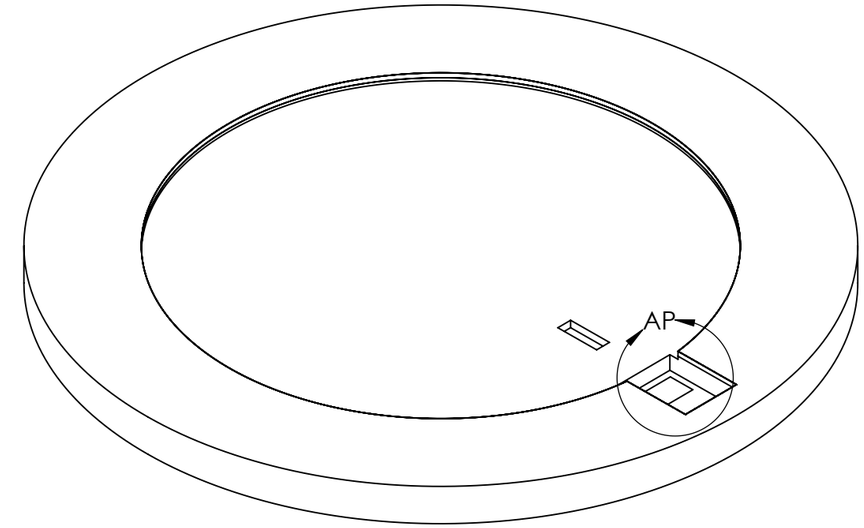

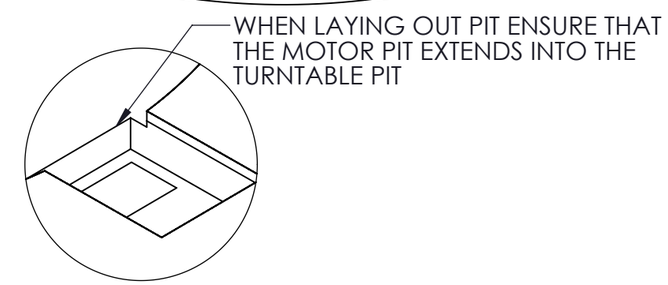

DETAIL AP
SCALE 1 : 25

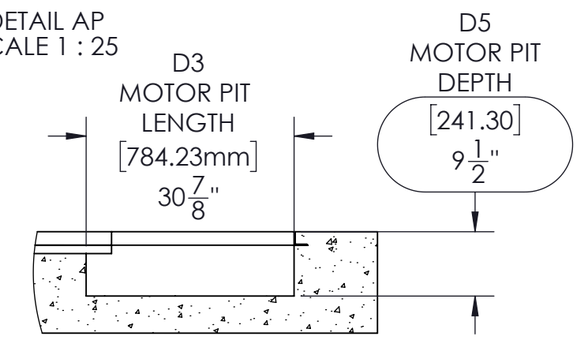

DETAIL AJ
SCALE 2 : 45

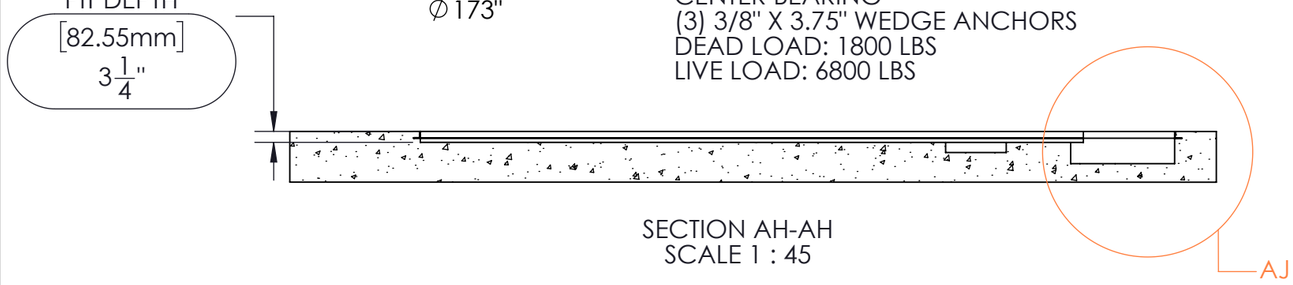

SECTION AH-AH
SCALE 1 : 45

DESIGN BY:	M.CASTRO	11/10/2016
DRAWN BY:	M.CASTRO	8/11/2026

CarouselUSA

UNLESS OTHERWISE NOTED DIMENSIONS ARE IN INCHES

TOLERANCES

.X = ± .125
.XX = ± .0625
.XXX = ± .010

FRACTIONAL = ±1/16"

ANGLES = ± .5

TITLE:

50SSO TURNTABLE, GENERAL ARRANGEMENT PIT DIMENSIONS

CAROUSEL USA

15206 Ceres Avenue
Fontana, CA 92335
TEL: (626) 334-7190
FAX: (626) 236-4060
www.Carousel-USA.com

PROPRIETARY AND CONFIDENTIAL

The information contained in this drawing is the sole property of Carousel USA. Any reproduction in part or as a whole without the written permission of Carousel USA is prohibited.

SIZE	DWG. NO.	REV
B	GA-50SSO	B
SCALE: 1:34	DO NOT SCALE DRAWING	SHEET 4 OF 5

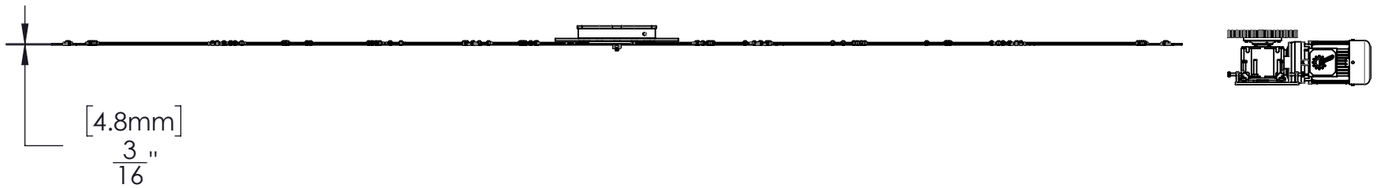

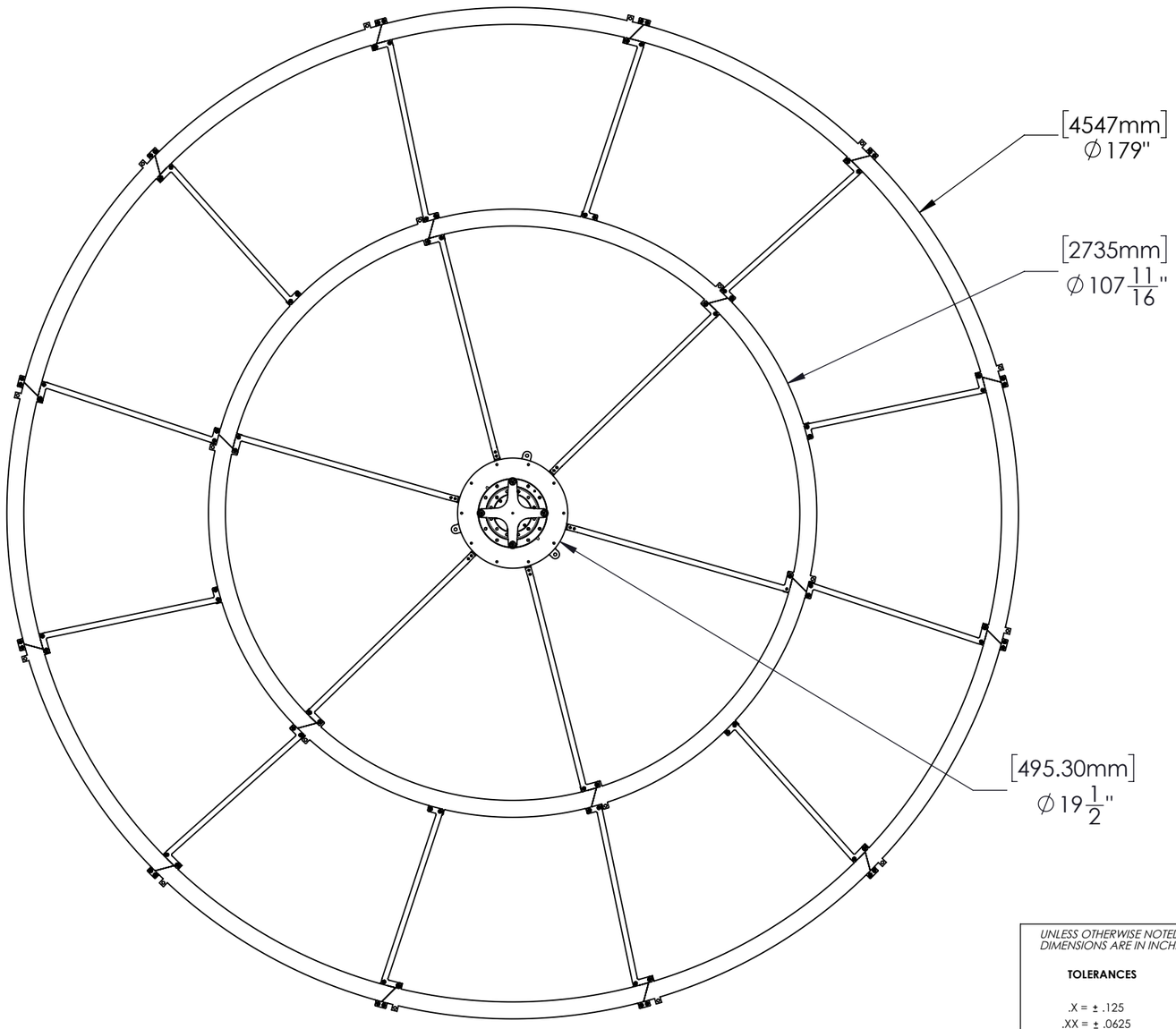

DESIGN BY:	M.CASTRO	11/10/2016
DRAWN BY:	M.CASTRO	8/11/2026

CarouselUSA

UNLESS OTHERWISE NOTED DIMENSIONS ARE IN INCHES

TOLERANCES

.X = ± .125
.XX = ± .0625
.XXX = ± .010

FRACTIONAL = ±1/16"

ANGLES = ± .5

TITLE:

50SSO TURNTABLE, GENERAL ARRANGEMENT TRACK DIMENSIONS

CAROUSEL USA

15206 Ceres Avenue
Fontana, CA 92335
TEL: (626) 334-7190
FAX: (626) 236-4060
www.Carousel-USA.com

PROPRIETARY AND CONFIDENTIAL

The information contained in this drawing is the sole property of Carousel USA. Any reproduction in part or as a whole without the written permission of Carousel USA is prohibited.

SIZE	DWG. NO.	REV
B	GA-50SSO	B

SCALE: 1:24 | DO NOT SCALE DRAWING | SHEET 5 OF 5